LUXURY ITALIAN FURNITURE

It's all about the experience

BADEN HAUS S.p.A.
SINCE 1979
www.badenhaus.it

MIRROR

Series ITEM# 44998

Features:
23 W, 1110 Lm, 6500 K
Includes adjustable support
Fully finished backboard
Includes installation hardware
Micro-Density Fiberboard (MDF) construction

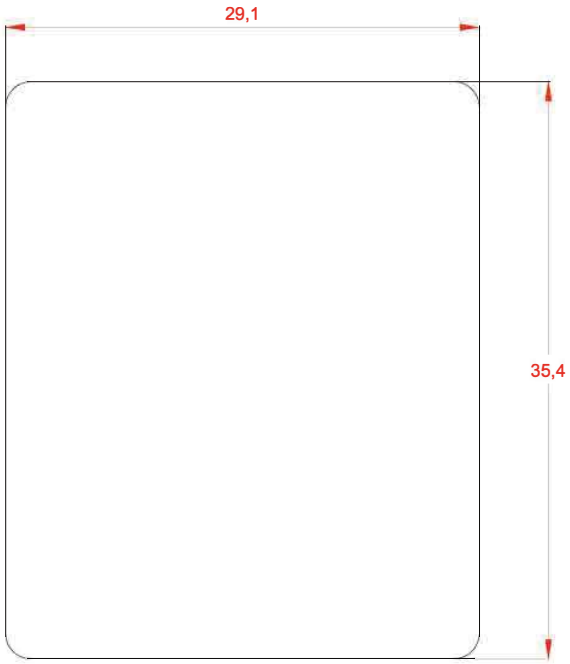

Side view

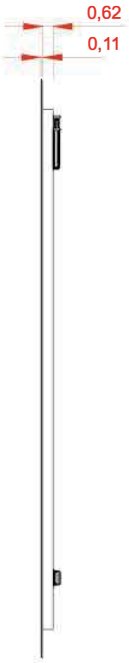

Back view

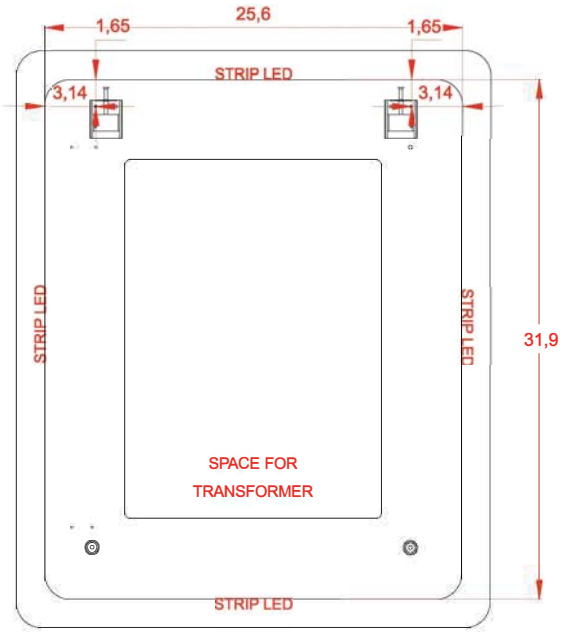

MIRROR
Series

Installation notes:
Install this product according to the installation guide
Wall bracing and Baden Haus supplied hardware are recommended.

Installation tools not included:

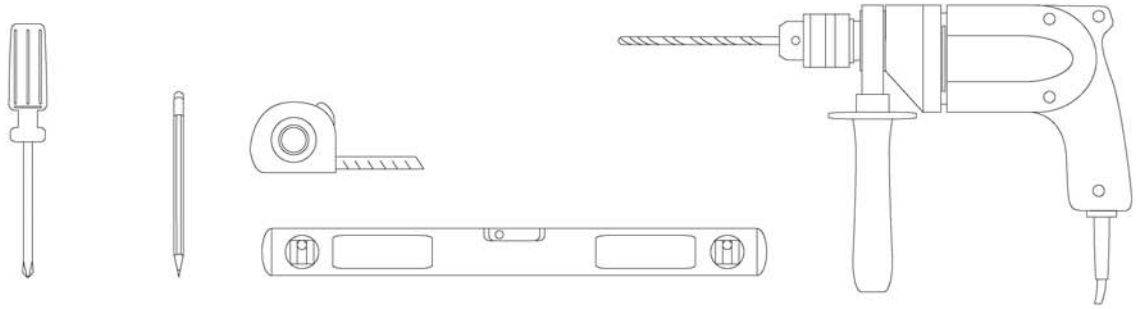

Parts supplied:

x2

Hook 0,21in x 2,48in

x2

Nylon rawlplug 0,31 x 1,57in **suitable for brick wall**

MIRRORS

Mirroir lighting full-led, guarantee an energy saving of a 80/90% compared to a classic lighting incandescent or halogen and life of about 3/5 times higher.

The LED lighting can exceed 50.000 hours of activities, reducing the costs of maintenance.
Not produce heat and withstand the high temperatures.
IP44 CE

Unlike normal halogen lamps, do not contain mercury and do not emit harmful UV rays for the health.

MIRROR
Series

1

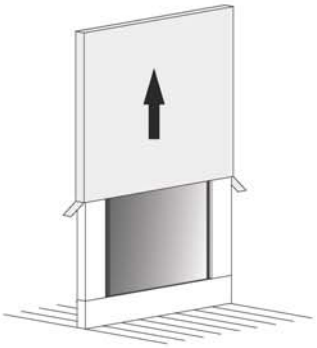

2

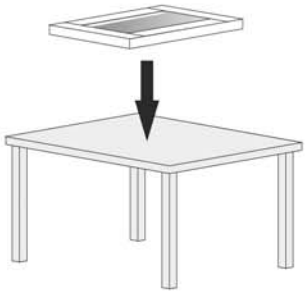

3

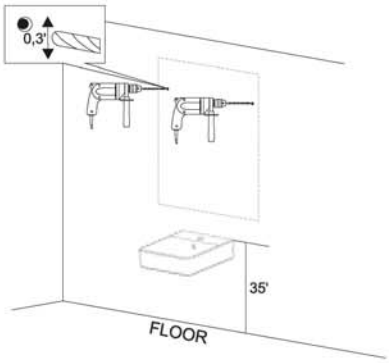

4

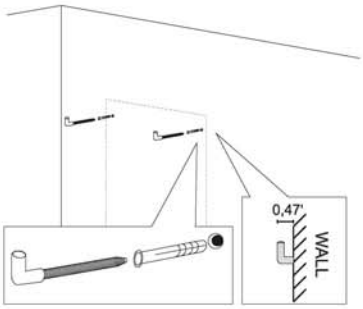

5

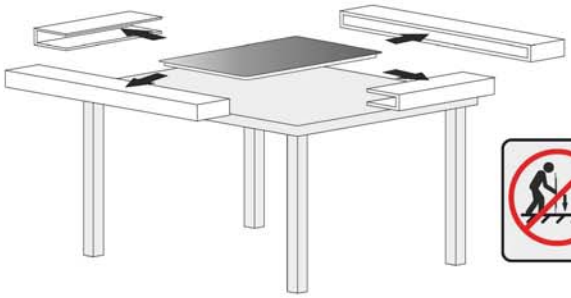

6

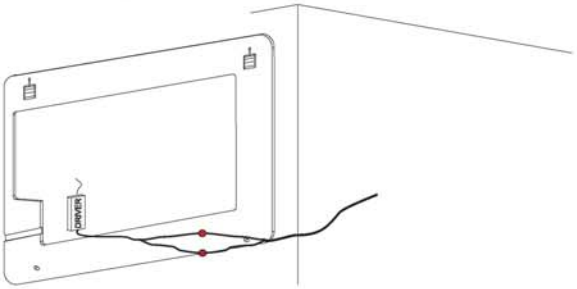

●POINT OF CONNECTION

7

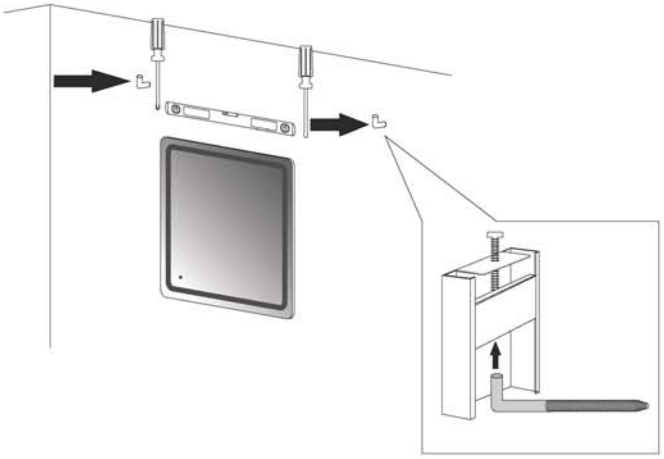

The light source contained in this luminaire shall only be replaced by the manufacturer or his service agent or a similar qualified person.